32” wide

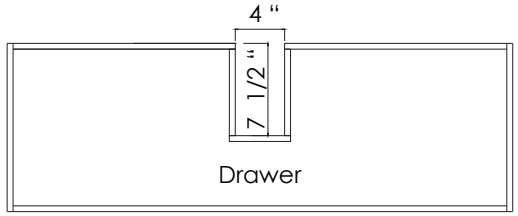

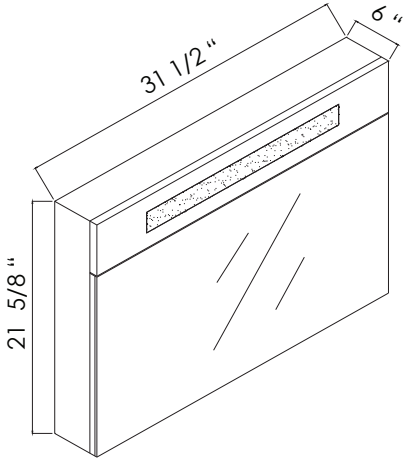

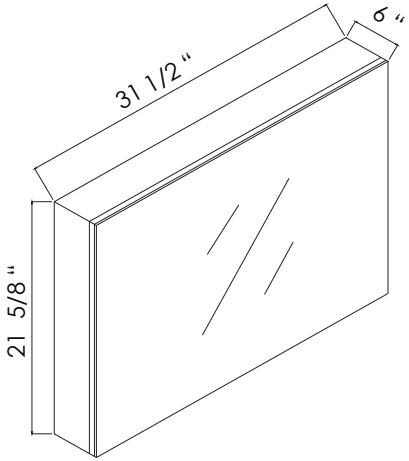

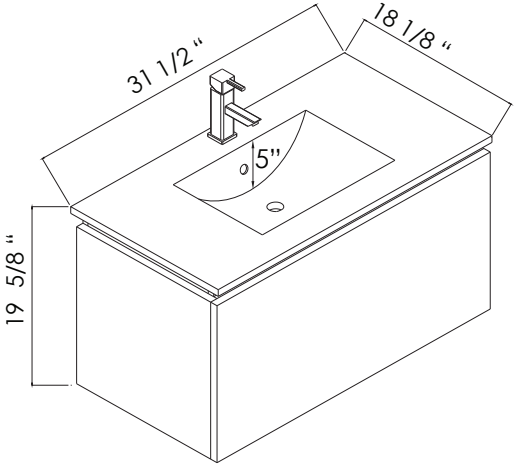

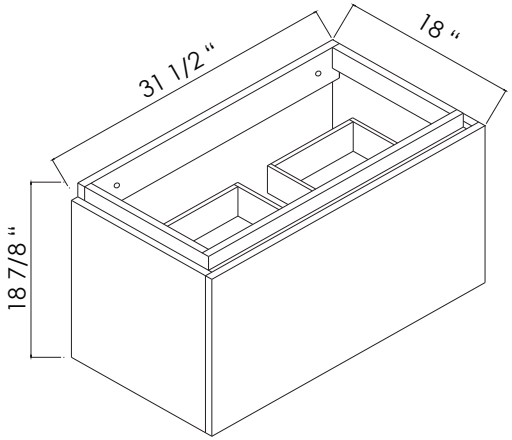
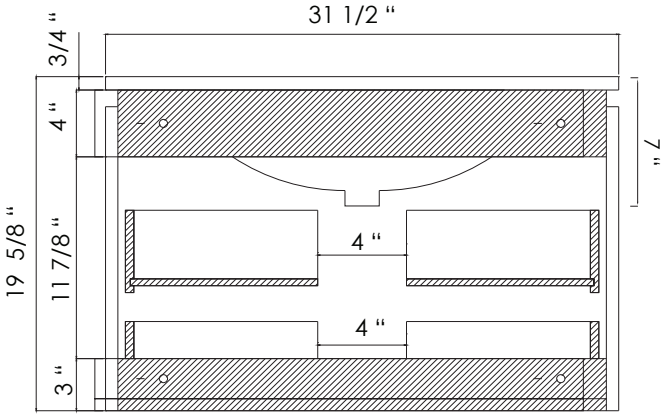
BACK VIEW